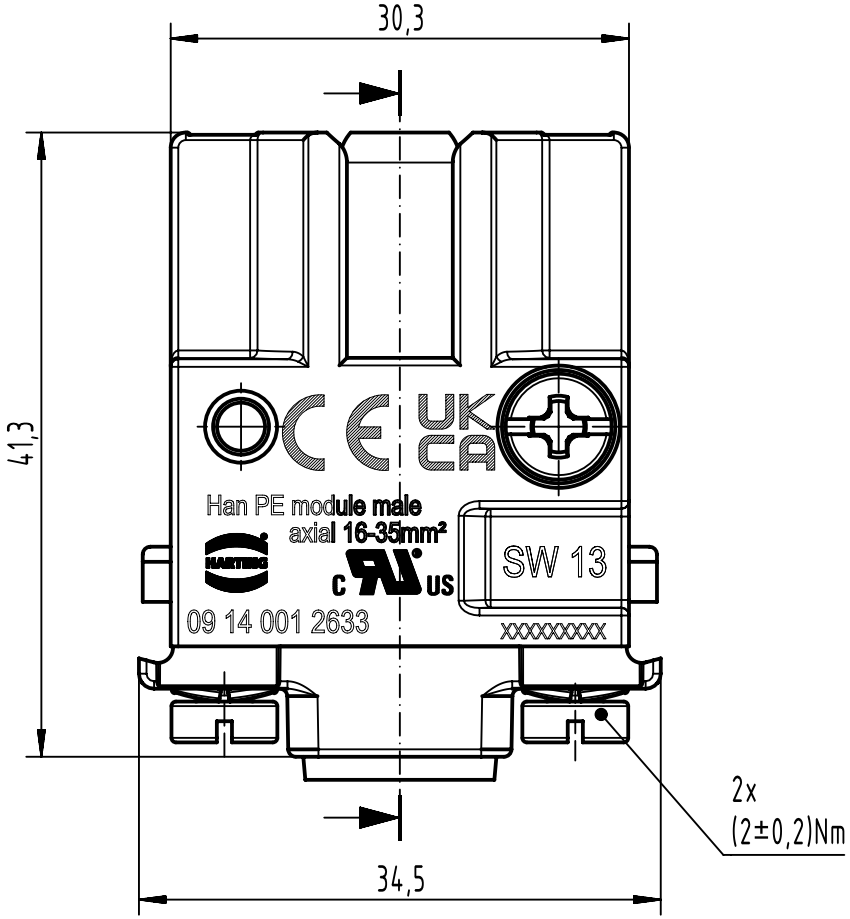

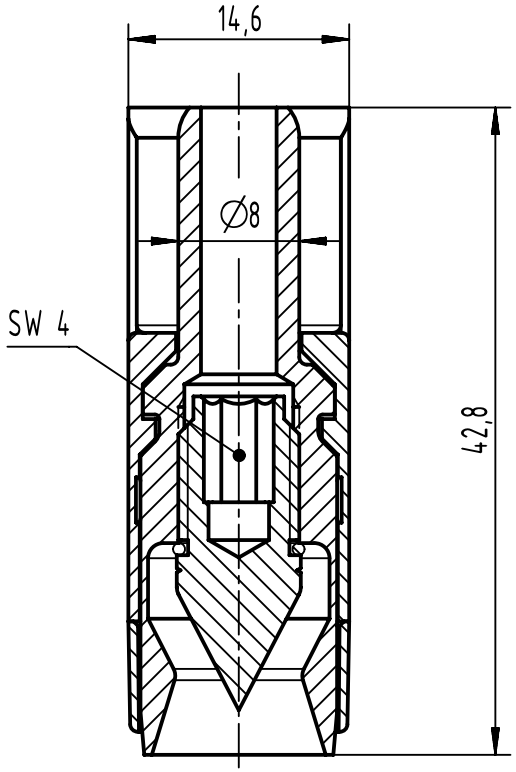

stripping length: 13mm

tightening torque: 16mm² 25mm² 35mm²
6Nm 7Nm 8Nm

for stranded wire 16-35mm², AWG 4-2

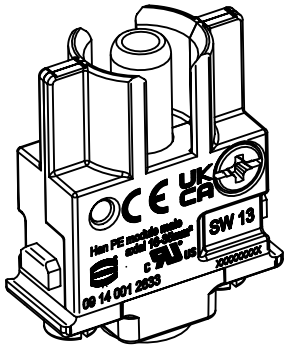

All Dimensions in mm Original Size DIN A4	Scale 2:1	Free size tol.		Ref. Sub.	
All rights reserved Department EL PD	Created by 105230	Inspected by SUNDERMEIER	Standardisation	Date 2024-02-07	State Final Release
HARTING D-32339 Espelkamp	Title Han PE-module male axial 16-35qmm				Doc-Key / ECM-Nr. 100608243/UGD/002/F 500000263049
	Type TB	Number 09 14 001 2633		Rev. F	Page 1/1

A4