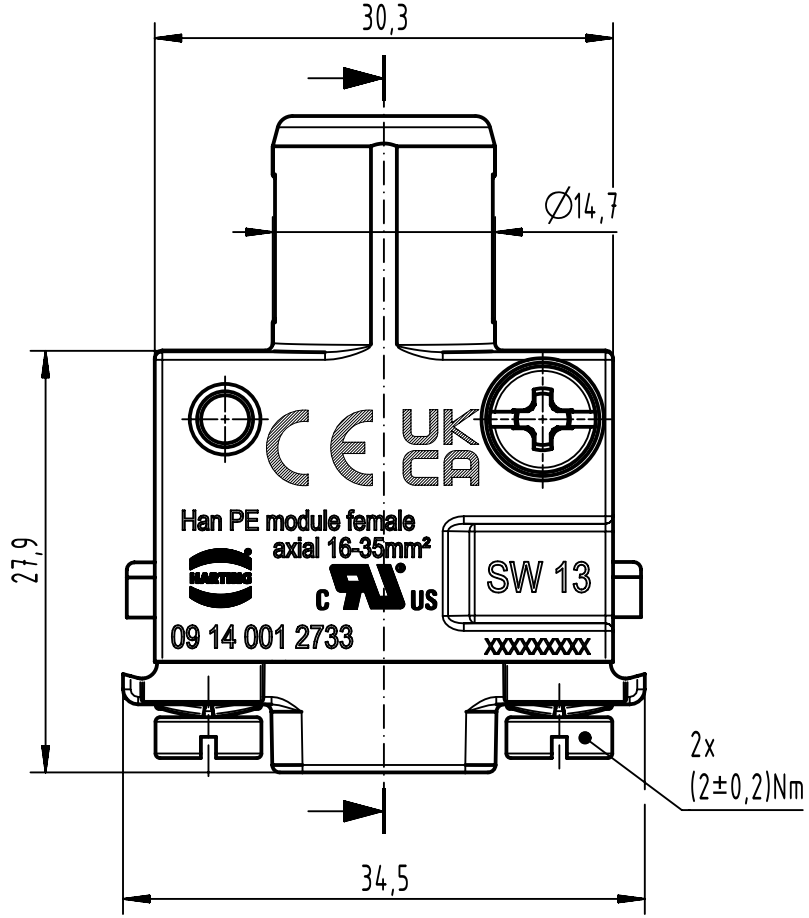

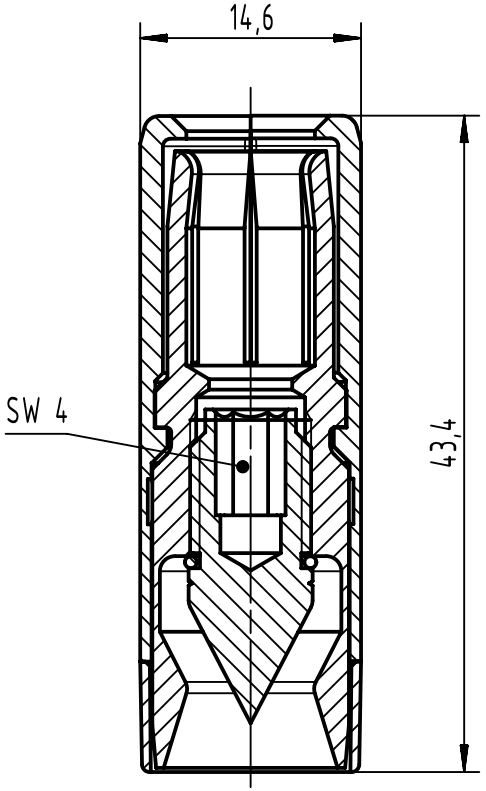

stripping length: 13mm

tightening torque: 16mm² 25mm² 35mm²

6Nm 7Nm 8Nm

for stranded wire 16-35mm², AWG 4-2

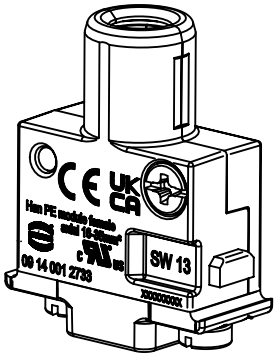

All Dimensions in mm Original Size DIN A4	Scale 2:1	Free size tol.		Ref. Sub.	
All rights reserved	Created by 105230	Inspected by SUNDERMEIER	Standardisation	Date 2024-02-07	State Final Release
Department EL PD	Title Han PE-module fem. axial 16-35qmm				Doc-Key / ECM-Nr. 100608508/UGD/002/E 500000263049
HARTING D-32339 Espelkamp	Type TB	Number 09 14 001 2733		Rev. E	Page 1/1

A4